ENG

INSTRUCTION FOR USE AND INSTALLATION

saunum

Saunum Air

Heater with a sauna room heat equalizer

V_25_12.1

THE BEST
SAUNA EXPERIENCE



I am very glad that you have invested in the Saunum device, and I believe that our innovative technology will offer you a wonderful and extraordinary sauna experience.

I have a degree in thermal engineering and come from the Southern Estonia, where my love for saunas began. The special feature of local historic smoke saunas is the lower temperature and higher humidity level than, for example, a classic Finnish sauna. In ordinary saunas, the stone volume of the sauna heater is generally small. Such an arrangement can cause a sudden, burning hot steam and an extremely uneven temperature, where your head and shoulder level is really hot, but your feet are left cold. Such an experience can be quite unpleasant and may cause headaches and lead to body stress. However, in ancient smoke saunas and Native American saunas, the stones were first heated during the day. Then the heat stored in the stones was used to cleanse the body and create a truly enjoyable sauna experience.

Inspired by the experience of a smoke sauna, I wanted to create an innovative solution that combines the best features of an authentic sauna with modern technology; enabling a pleasantly mild and relaxing sauna experience without painfully scorching steam. For that, however, I had to solve the problem of how to achieve an even temperature, at both the head and foot levels. My development work was supported by research done alongside Tallinn University of Technology

in which we analyzed the thermal stratification and air movement in the sauna room. Saunum was born in cooperation between scientific thinking and technological innovation.

Saunum's unique patented mixing system of air layers captures the hot steam that rises under the ceiling of the sauna room, mixes it with the cooler air from the surface of the floor, and directs the milder steam back evenly. This makes for an enjoyable, unaggressive heat. You can sit in the sauna for a longer time, and enjoy a sweat and a deep cleanse without feeling tired. The stone volume of our heaters is significantly larger than most widely used sauna heaters, which is the reason for the especially pleasant indoor climate with long and soft steam.

A moist steamy sauna, a therapeutic salt sauna, or a healthy aroma sauna – all of these functions are available on Saunum's devices to create a truly relaxing sauna experience. When using Himalayan salt spheres in our device, salt ions that are beneficial to skin and respiratory tract evaporate and the steam circulates these into the air. Adding a sauna aroma system that blends steam and healthy aroma oil creates an even more enjoyable sauna environment.

Saunum's sauna devices are suitable for both adults and children.

Have a pleasant sauna!



Andrus Vare
The creator of Saunum

CONTENTS

Product completeness ____ 8
Parts of the device ____ 9
Heater sizing ____ 10 - 11
Working principle ____ 12

BEFORE THE INSTALLATION

Sauna sizing and heater selection ____ 14
Sauna room ventilation ____ 15 - 17

INSTALLATION

Safety information ____ 18 - 19
Safety distance ____ 20 - 21
Electrical connections ____ 22 - 25
Installation instructions ____ 26 - 29
Control panel ____ 30
Temperature sensor ____ 31 - 33
Loading stones ____ 34

DIRECTION FOR USE

Warnings ____ 35
Heating the sauna room ____ 36
Using the sauna climate device ____ 36
Adjusting the temperature ____ 37
Use of Himalayan salt ____ 37
Ladling water on the heater ____ 38

Maintenance ____ 39 - 40
Solving problems ____ 40 - 41
Thermal cut off ____ 42
Element replacement ____ 43
Warranty ____ 44
Installation report ____ 45

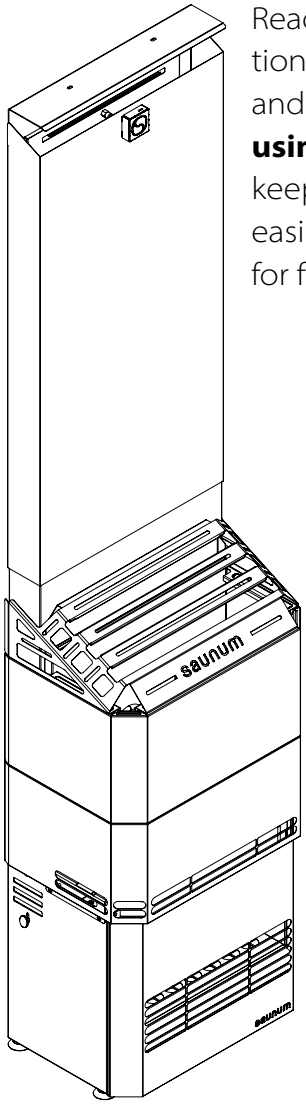

Read all of the instructions for use carefully and thoroughly **before using the device** and keep them in a safe and easily accessible place for future reference.

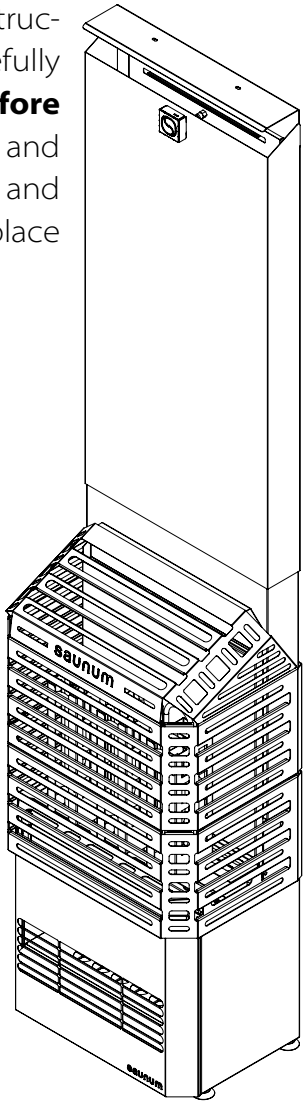

Saunum **congratulates you** on choosing a heater with an innovative sauna room indoor Heat Equalizer!

HOW TO USE SAUNA

Enjoying Sauna has a relaxing effect. It should never be a source of stress.

Having the best Sauna experience is individual. While using Sauna it is good to have as fewer clothing as you feel comfortable.

Go to sauna room when it has reached your target temperature (see page 36). When you have target temperature use dedicated Sauna ladle with hot water - around 6–7 fl oz at once - by pouring it on hot stones (see page 38).

Always use hot water, cold water will fragment stones quicker.

With Saunum climate device use ventilation mode to have even distribution of steam between top and bottom layers in room.

Sweating is perfectly normal in sauna. By using Saunum Air IQ control panel you can always pre-set or manually change temperature, humidity (by throwing water on hot stones) and Saunum climate device ventilator speed to find best settings you enjoy the most.

These installation and operating instructions are intended for the sauna owner, maintenance personnel, and the electrician responsible for installing the Saunum Air heater with an in-built Climate Equalizing System (hereinafter referred to as the "climate device").

After installation, the instructions must be handed over to the owner or maintenance provider.

Before using the heater, carefully read the installation and safety instructions.

If the heater has been transported or stored at low temperatures, allow the device to acclimatize to room temperature before installation or connection to the power supply.

Exposure to ambient temperatures below 23 °F /–5 °C may activate the overheat protector, even if the heater has not been used. In such cases, the heater must be brought into a warm environment and allowed to warm up before installation or commissioning.

The overheat protector can be reset only after the temperature of the device has risen sufficiently (**see p. 42**).

The Saunum Air is intended for heating the sauna room at 140–194 °F (60–90 °C) and for leveling the sauna room climate during steaming.

Please note! The heater with the climate device must not be operated in temperatures exceeding 194 °F/90 °C!

Do not use the Saunum Air for any other purposes!

The installer is responsible for verifying compliance with local building codes and structural requirements.

NOTE: To ensure the longevity of the device, make sure that the temperature of the sauna room at the height of the lower part of the device does not exceed 176 °F (80 °C). If it is exceeded, the thermal protection will be applied and the fan will stop; the fan will start running again if the temperature drops below the fuse limit of application.

The manufacturer is not responsible for any malfunction caused by an overrun of the authorized operating temperature.

Saunum Air is designed to operate exclusively with the Saunum Air IQ control system.

PRODUCT **COMPLETENESS**

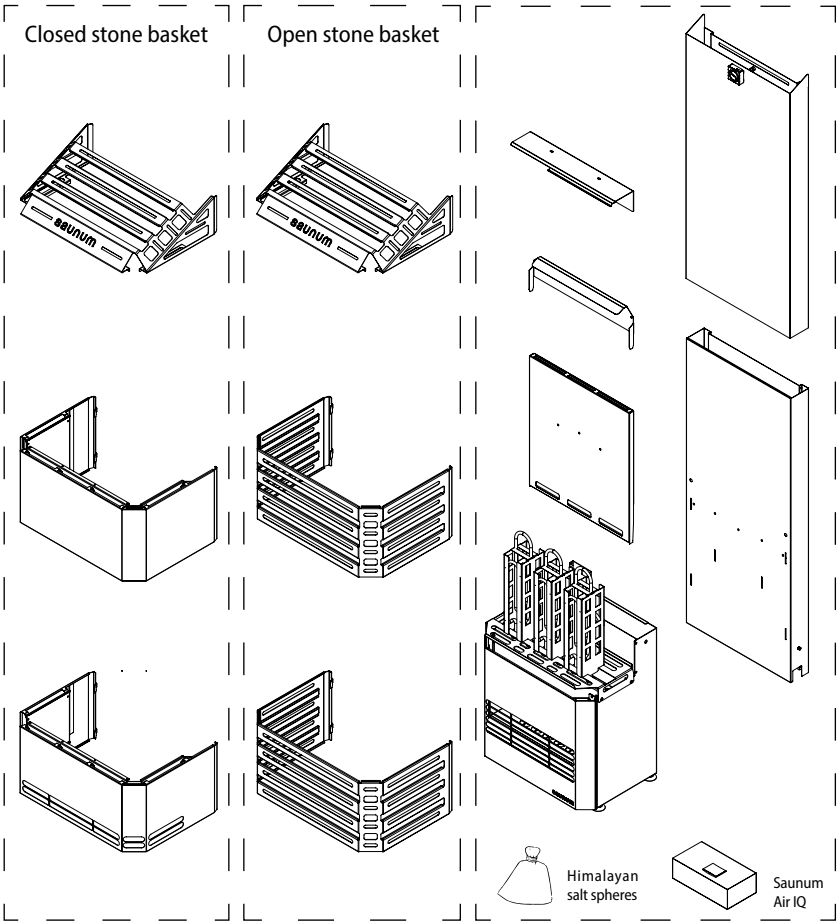

Elements that are not part of the climate device package: Safety Rail, bottom air deflector, power supply cables and stones.

PARTS OF THE DEVICE

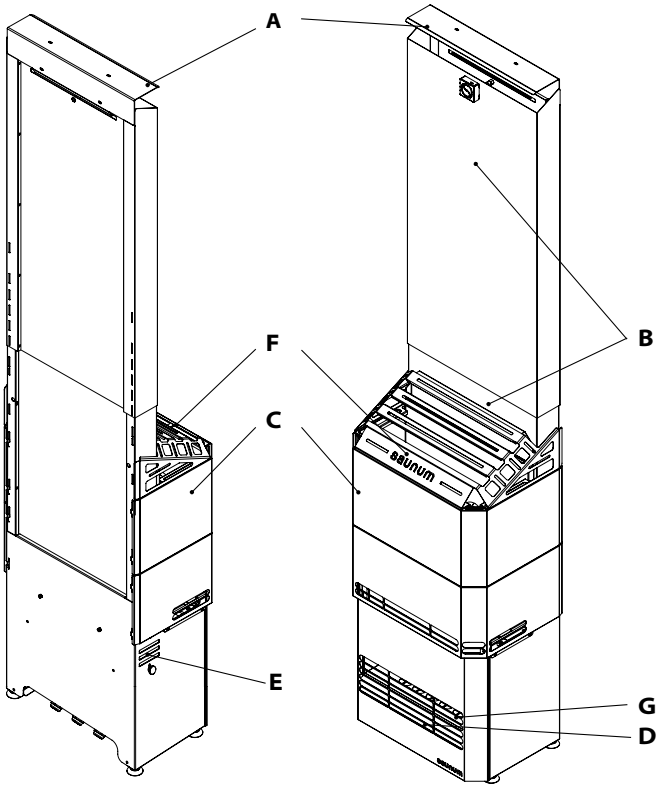

A - Hot air intake cap
B - Hot air intake
C - Stone basket
D - Air outlet grille
E - Cool air intake valve
F - Protective grill
G - Himalayan salt tray

Remove the protective film before assembling the heater!

HEATER SIZING

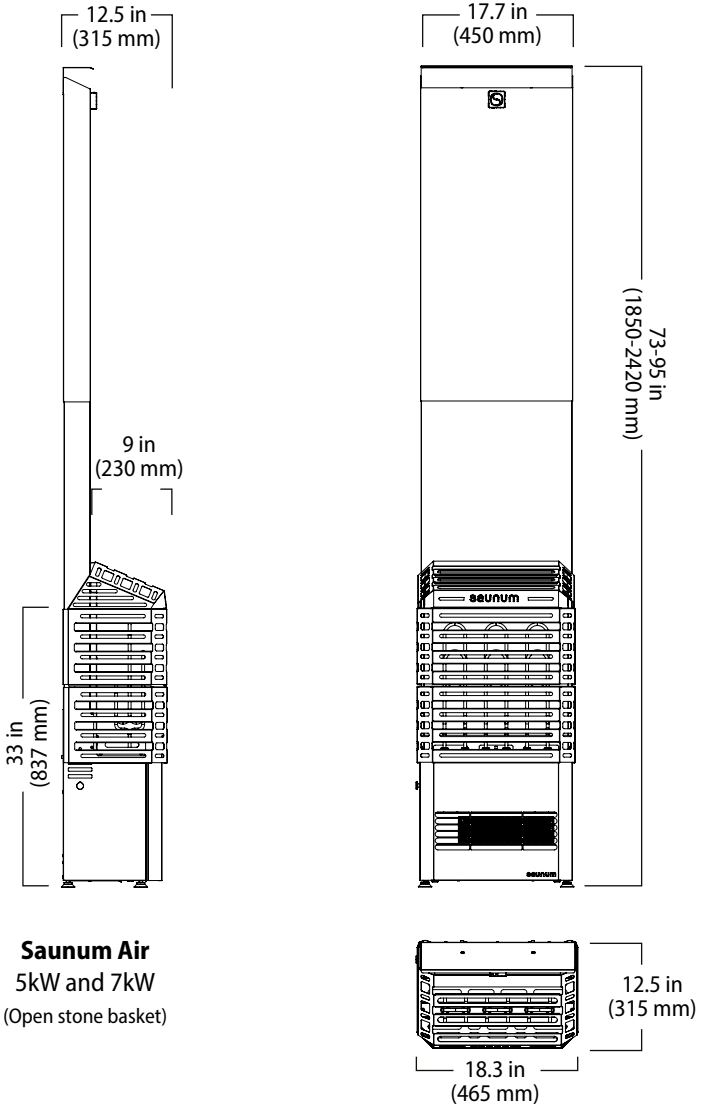

Saunum Air
5kW and 7kW
(Open stone basket)

Figure 1

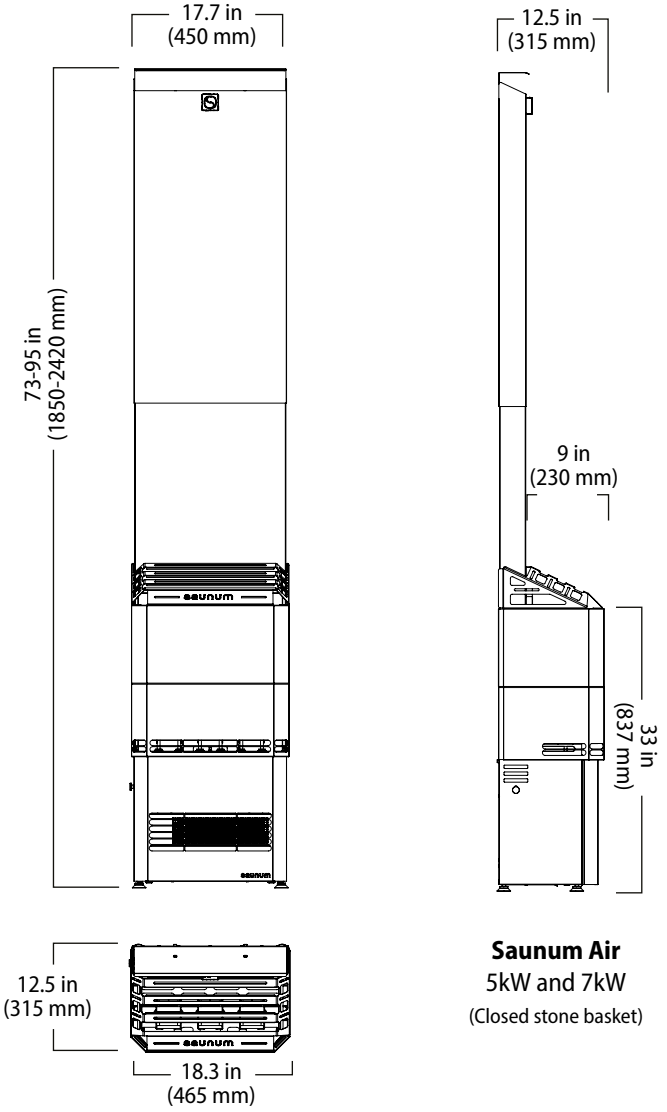

Saunum Air
5kW and 7kW
(Closed stone basket)

WORKING **PRINCIPLE**

The image below shows the operation of the Saunum device during heating, with the target temperature range of 176–194°F (80-90 °C), the ventilator turned off. When water is poured onto the hot stones in a traditional sauna, the resulting steam rises to the upper layers of the sauna room, creating an unpleasant scorching effect.

The image below illustrates Saunum climate device state when ventilator is working. Saunum is designed to allow pouring water on the hot stones while the built-in fan distributes the steam evenly throughout the sauna, ensuring a balanced and enjoyable sauna experience.

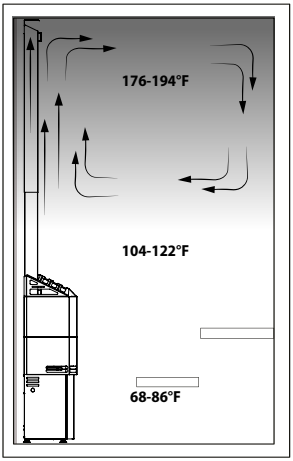

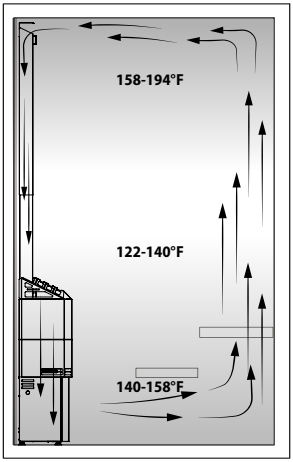

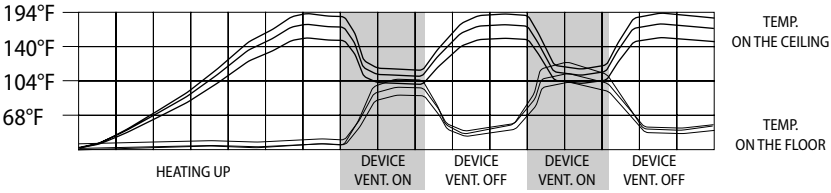

BEFORE THE **INSTALLATION**

The installation of the Saunum Air L must be performed by a certified electrician following The National Electrical Code (NEC) and local building codes.

Ensure that the heater is at normal ambient temperature at the time of electrical connection.

The connection of the device must be performed in a stable location with a cable that meets the temperature conditions.

The required over-current breaker sizes and the connection cables dimensions are provided by a certified electrician following NEC and local building codes.

Before starting the installation work, read the installation instructions and observe the following:

- The power and type of the heater are suitable for the given sauna room. The recommended sauna room volume is given in **Table 1** (see pages 18–19).
- At the installation site of the sauna climate device, the minimum safety distances given in **Table 1** (see pages 18–19), measured from the heater housing, are guaranteed.
- The dimensions of the device are shown in **Figure 1** (see pages 10-11).
- It must also be ensured that the upper edge of the air output is lower than the lower edge of the bench.
- There must be no obstructions in front of the air output. The air flow must be able to flow freely across the sauna room.
- The device works most efficiently when its hot air intake cap is installed against the ceiling of the sauna room and the air is blown under the bench.
- Safety distances must be complied with unconditionally, as failure to do so may result in a fire hazard.

SAUNA SIZING AND **HEATER** SELECTION

Proper heater performance depends not only on the sauna room's volume, but also on how the room is constructed and insulated. This section explains how to prepare the sauna space and how to calculate the correct heater size for optimal operation and comfort.

PREPARING THE SAUNA ROOM

Before installing the Saunum Air, the sauna must be properly insulated and prepared.

Poorly insulated walls and ceilings can result in long heating times and energy inefficiency.

Note: The minimum room height required for the Saunum Air unit is listed in Table 1 (pages 18–19).

Follow the steps below to determine the correct heater power for your sauna room:

1. Measure the Room Volume

Calculate the basic sauna volume:
Y (length) × X (width) × Z (height) (in feet)
Result is the base volume in cubic feet (ft^3)

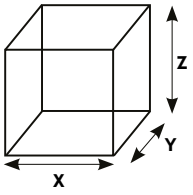

Figure 2

2. Adjust for Non-Insulated Wood Construction

If the sauna is constructed from logs, planks, or staves (without internal insulation),
Multiply the base volume by **1.5**
This accounts for additional heat loss through uninsulated wood surfaces.

3. Adjust for Cold Surfaces

For any cold surface materials such as glass, tile, brick, concrete, or stone:

Add 3.0 ft^3 to the total volume per 1 ft^2 of such material.

Example:
A glass door of 24 ft^2
$24 \times 3 = 72$ ft^3

Add this to the sauna volume.

4. Determine Total (Effective) Sauna Volume

Add all adjustments to your base volume. This is the final volume to be used for heater selection.

5. Choose the Heater Size

Use the final sauna volume to select the correct heater model.

If your volume falls between two heater sizes, choose the larger one for better heat-up time, efficiency, and temperature stability.

Example Calculation

A sauna room has dimensions:
Length = 7 ft, Width = 6 ft, Height = 8.4 ft
$7 \times 6 \times 8.4 = 353$ ft^3
There is a glass door of 24 ft^2
$24 \times 3 = 72$ ft^3
Total volume = $353 + 72 = 425$ ft^3
Choose a heater rated for at least 425 ft^3

SAUNA ROOM
VENTILATION

This ventilation setup allows Saunum technology to operate at its full potential.

When installing the heater, make sure the **Air Intake** is positioned close to the heater's air inlet.

Natural or with **mechanical** extraction:

The **intake opening** should be located no **higher than 12 inches (30 cm) from the floor**.

The **air intake pipe** should have a diameter of approximately **4 inches (100 mm)**, providing an approximate ventilation area of **12.5 in² (80.6 cm²)**.

The **air extraction pipe** should have a diameter of approximately **6 to 8 inches (150–200 mm)**, providing a ventilation area of approximately **28–50 in² (180–322 cm²)**.

Extraction vents should be installed as far as possible from the heater, at a height of no less than 24 inches (60 cm) and no more than 47 inches (120 cm) from the floor.

For **mechanical** ventilation:

An additional ceiling-mounted air intake may be installed. This intake is **optional**, but **must be equipped with a check valve** to prevent backflow. A fan may be used to supply fresh air through this intake if required.

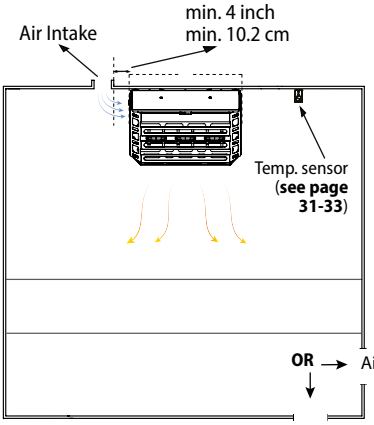

Figure 3

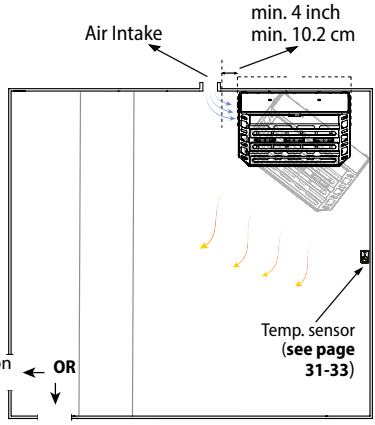

Figure 4

Recommended for better fresh air mixing in Saunum climate device.

Optimal placement of ventilation openings for **mechanical ventilation**:

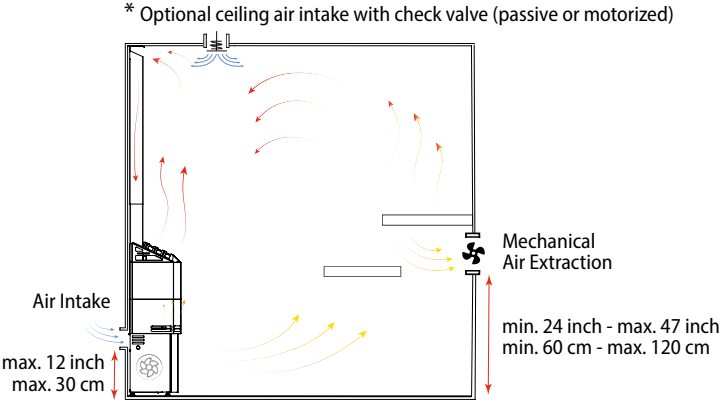

Figure 5

* The ceiling air intake may function passively or include a fan in mechanical ventilation setups. A fan is not required.

Optimal placement of ventilation openings for **natural ventilation**:

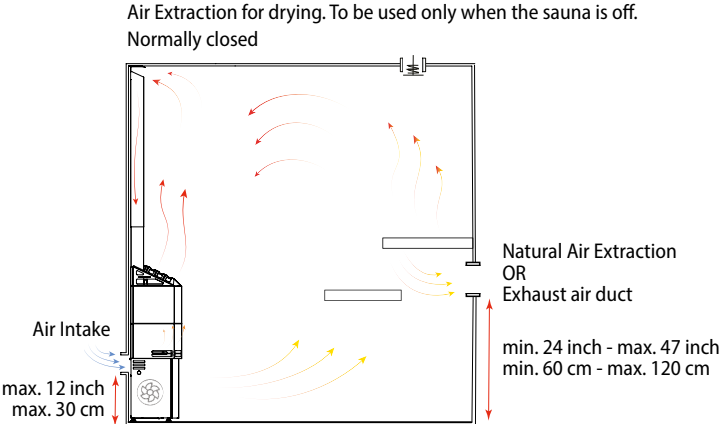

Figure 6

The air in the sauna room must be changed at least six times an hour.

Air intake ventilation in a sauna room is mandatory.

Install the air intake vent under or next to the climate device. The **air intake pipe** must have a diameter about **4" (100 mm, ≈12.5 in²).**

Air output ventilation in the sauna room is mandatory.

Install the air extraction higher than intake and as far as possible from the Saunum Air unit. The **air output pipe** must be twice the diameter of the air intake pipe (approximately **6"–8" / 150–200 mm, ≈28–50 in²**.

Incorrect ventilation layout.

In this setup, the exhaust openings are positioned lower than the intake, and the ceiling vent remains open without a check valve.
This configuration disrupts proper warm air circulation and causes excessive heat loss, reducing the sauna's efficiency.

Do not install ventilation this way — it is ineffective and should be avoided!

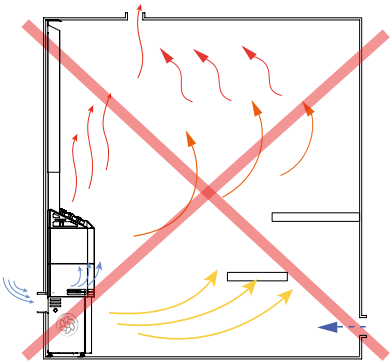

Table 1

DEVICE	WATTAGE	VOLTAGE	PHASE	AMPERAGE
Saunum Air – 5	4950	240	1	20.63
Saunum Air – 7	6900	240	1	28.75

Do not connect the heater to the power and/or utilities via a GFCI breaker!

DEVICE	ROOM SIZE ft^3/ m^3	MIN. CEILING HEIGHT inch/mm
Saunum Air – 5 (open stone basket)	106–212/3-6	73"/1850 mm
Saunum Air – 7 (open stone basket)	177–318/5-9	73"/1850 mm
Saunum Air – 5 (closed stone basket)	106–212/3-6	73"/1850 mm
Saunum Air – 7 (closed stone basket)	177–318/5-9	73"/1850 mm

CIRCUIT BREAKER	WIRE FROM ELECTRICAL PANEL TO HEATER TERMINAL
30	(2) #10+ N + G
40	(2) #8 + N + G

Min 90ºC , copper wiring

MIN. SAFE DISTANCE FROM STONE BASKET TO CEILING	MIN. SAFE DISTANCE FROM THE HEATER (See diagrams on page 20)	MIN. SAFE DISTANCE FROM FAN OUTPUT
40"/1013 mm	A: 6" from sides & B: 6" from the front side	20"/500 mm
40"/1013 mm	A: 6" from sides & B: 6" from the front side	20"/500 mm
40"/1013 mm	A: 2" from sides & B: 2" from the front side	20"/500 mm
40"/1013 mm	A: 2" from sides & B: 2" from the front side	20"/500 mm

SAFETY DISTANCES

Safety distances depend on the type of stone basket and apply to combustible materials (e.g. wood, paper, textiles, etc.).

Saunum Air with closed basket -
2 inch A and **B** dimensions.
Saunum Air with open basket -
6 inch A and **B** dimensions.
NB! Only the rear side of the device may be installed directly against the sauna wall or ceiling panels.

If the device is installed into a recess (niche) in the wall, the niche depth must **not exceed 3.9 inch**.

If, in a niche installation, the lateral safety distance **A** is less than the required value above (2 inch or 6 inch), the corresponding structure must be made of noncombustible material (**Figure 7**).

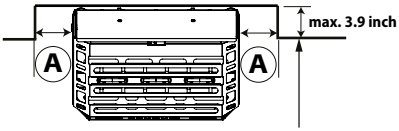

If smaller than safety distance then must be made of noncombustible material.

Figure 7

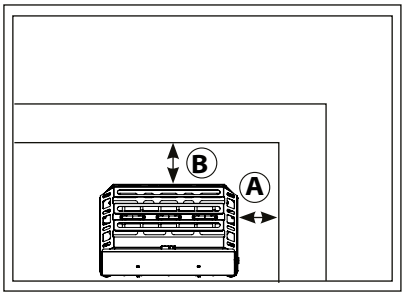

Figure 8

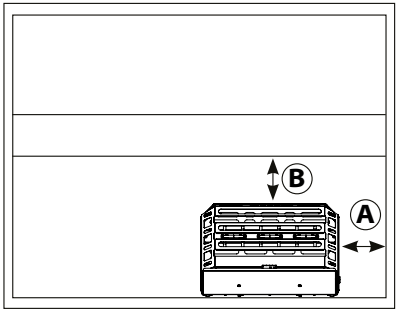

Figure 9

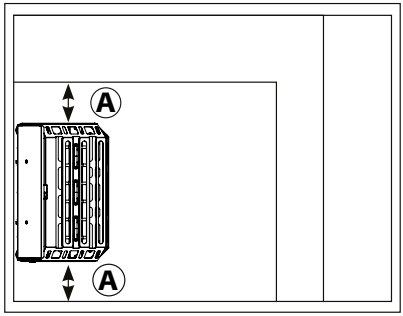

Figure 10

Do not keep your feet or any body part closer than 20 inches in front of the air output if the fan is operating!

Please keep children at least 40 inches away if the fan is operating — sauna steam may cause skin burns!

Do not allow pets in the sauna room while the device is operating!

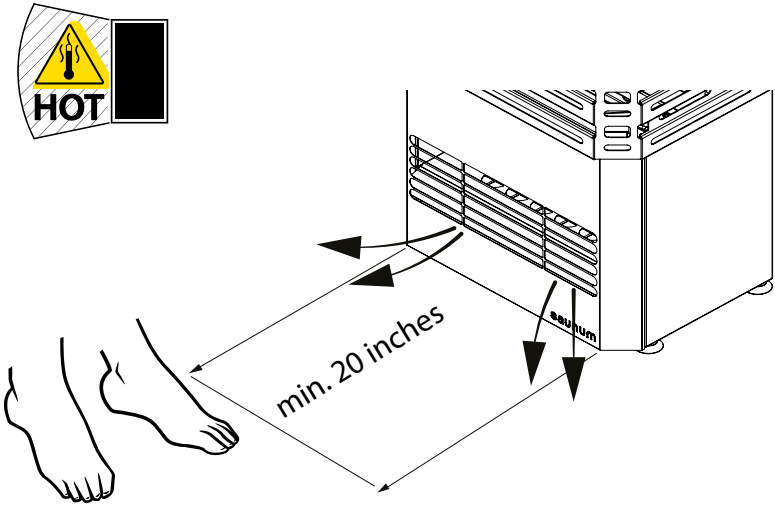

ELECTRICAL
CONNECTIONS

Connect the Saunum Air to the Air IQ control unit.

The Saunum Air must be connected in a half stationary position to the junction box on the wall of the sauna room.

The junction box must be splashproof and its maximum height from the floor can be up to 20 in.

The power cable of the heater are provided by a certified electrician following NEC and local building codes.

To access the device electrical connections, it is necessary to open the bottom panel.

To open the panel, completely loosen the two bolts behind front grille (see figure below).

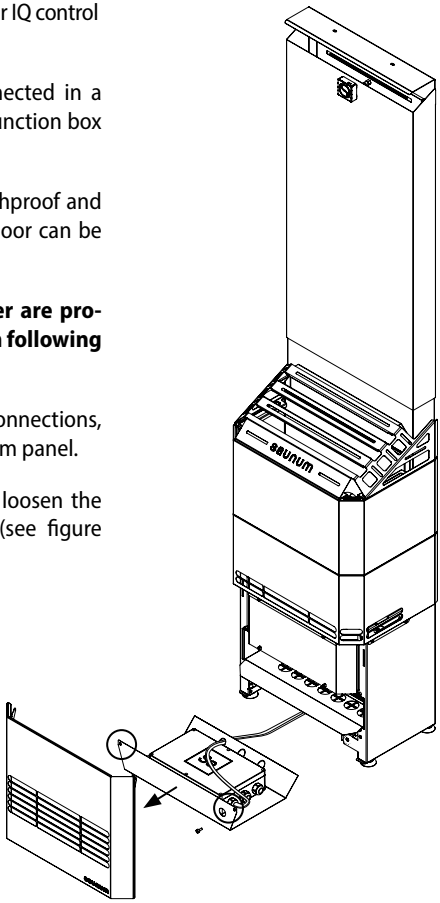

- The heater must be powered from a 240 VAC supply circuit through a control device protected by an over-current fuse, as installed by a qualified electrician in accordance with NEC and local building codes.
- If the connection and installation cables are located higher than 40 in. (1,000 mm) from the sauna room floor or routed inside the walls, they must be rated to withstand temperatures of at least 257 °F (125 °C) (e.g., SSJ-type cables). Electrical equipment installed in the sauna room below 40 in (1,000 mm) from the floor must be rated for at least 194 °F (90 °C) (e.g., T125-class components).

The Saunum Air may only be connected by a professional electrician in accordance with the applicable regulations!

ELECTRIC HEATER
INSULATION RESISTANCE

During the final inspection of the electrical installation, a leakage may be detected when measuring the insulation resistance of the Saunum Air, and which has occurred due to the insulation material of the heating elements absorbing moisture from the air (storage, transport). After a few uses of the Saunum Air, this moisture will disappear.

Do not connect the heater through a GFCI (Ground Fault Circuit Interrupter) breaker, as it may cause unwanted tripping during normal heater operation.

ELECTRICAL CONNECTION

! IMPORTANT !

All wiring must be done in accordance with National Electric Code and local building code.

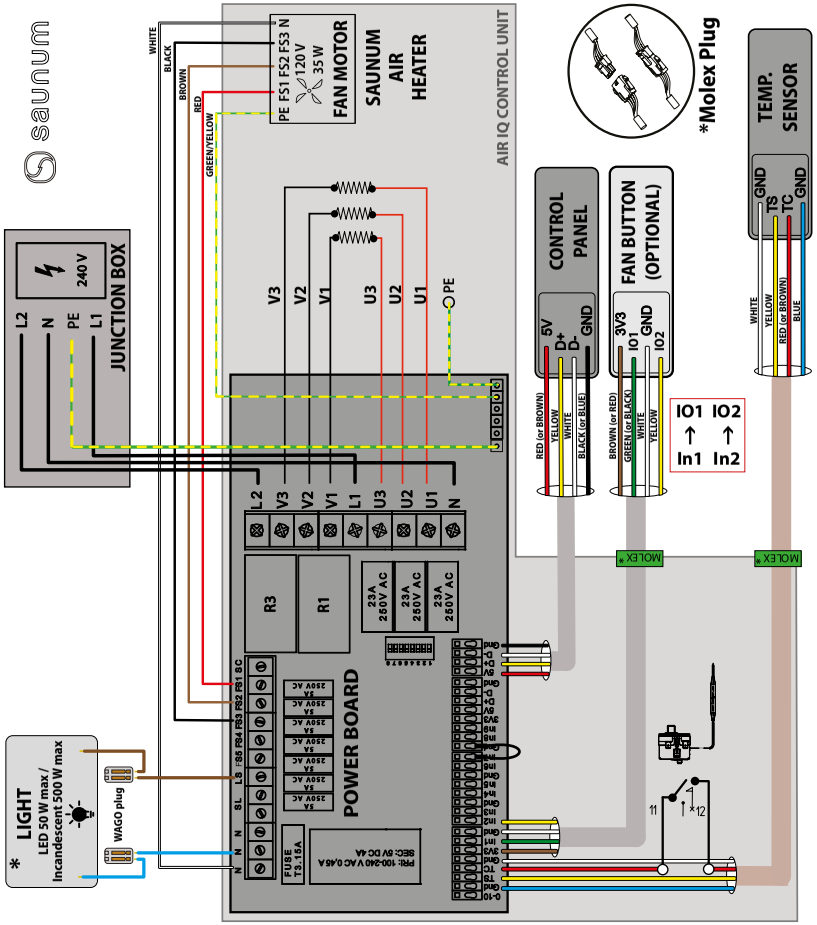

* LED light power supply (max 50 W) must be equipped with an inrush current limiter.
For incandescent light bulbs, the maximum permitted power is 500 W.
For loads exceeding 50 W, the circuit must be used for switching purposes only.

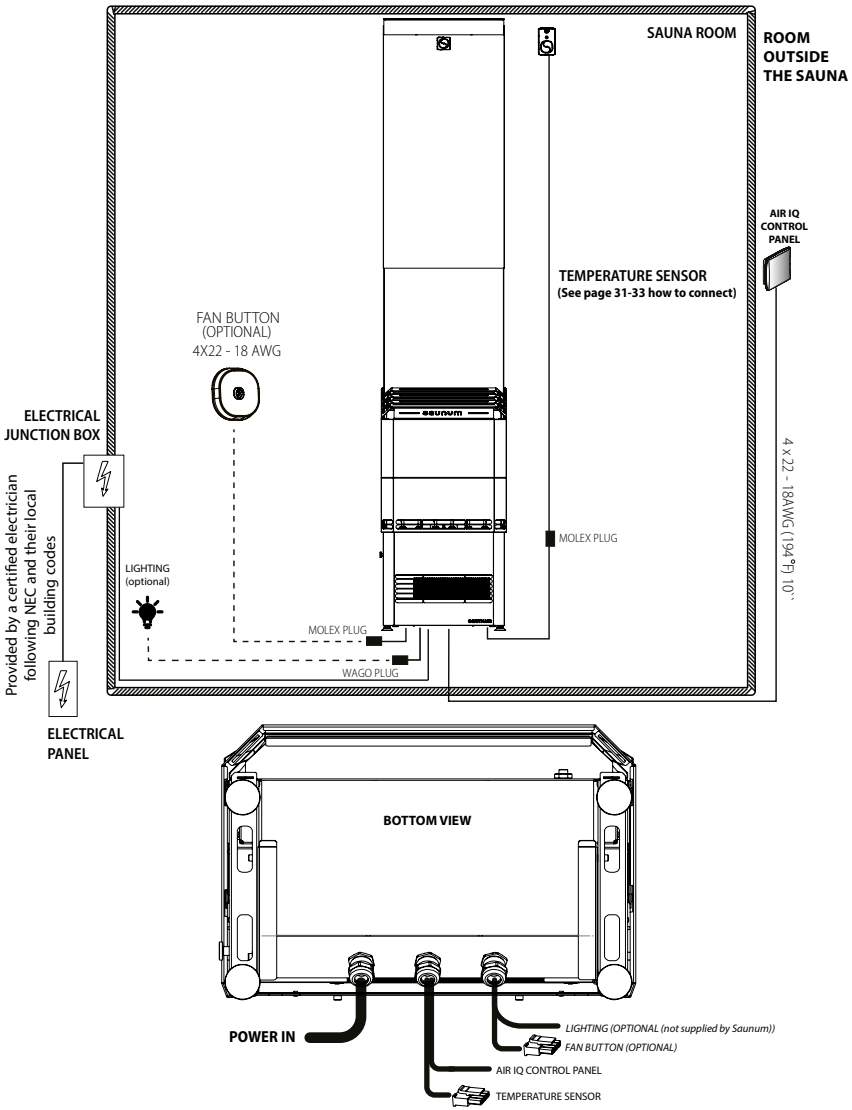

*** POWER IN** field wiring according to NEC and local electrical code

INSTALLATION

1. Install the hot air intake cap **(A)** and center the heater housing in relation to the cap **(B).**

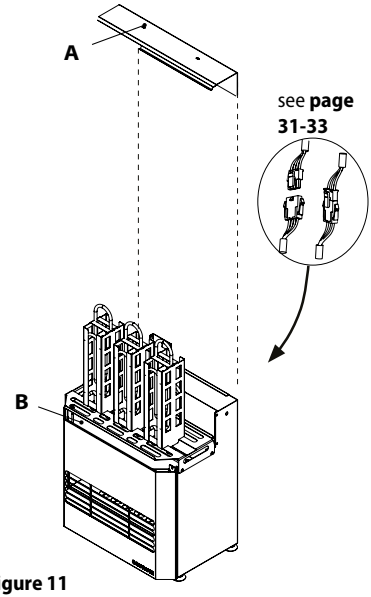

Figure 11

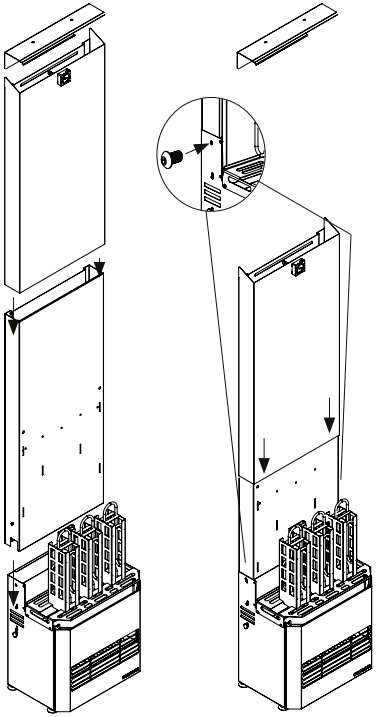

Figure 12

Place the cap at the connection point between the wall and the ceiling (corner) and fasten with a mounting suitable for the base material. It can be attached to the wall and/or the ceiling. Center the heater under the cap and adjust the feet so that the device is level.

Connect the temperature sensor behind the heater (see **page 31-33**) with Molex plug

2. Place the parts of the telescopic flue inside each other. Next, place the lower part of the intake at the end of the heater's intake socket. Adjust the heater housing as needed.

Carefully lower the intake inside each other into the intake socket on the top of the heater.

3. Hang the telescopic flue on the hot air intake cap **(A).**

4. Install the heat shield **(C)** with the coupling hooks.

5. Install the heat deflector **(E).**

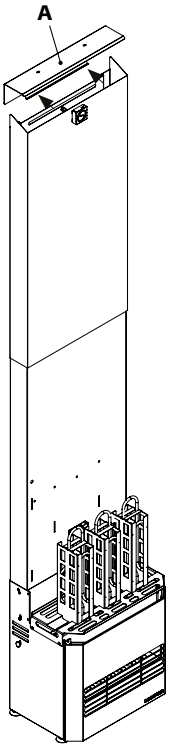

Figure 13

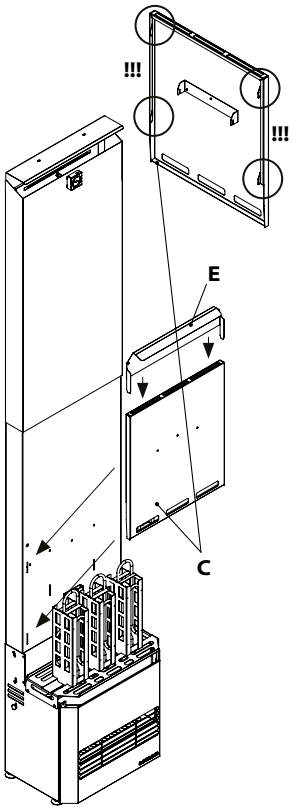

Figure 14

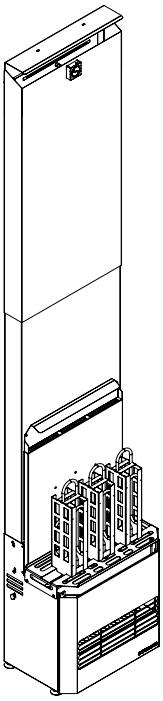

Figure 15

6. Install each stone basket section using the hooks in the opening behind the hot air intake (**Fig. 16 & 17**).

7. Ensure the heater is properly leveled and firmly supported before loading stones. Fill the stone basket evenly to allow correct air circulation and heating performance.

Wear gloves to protect your hands.

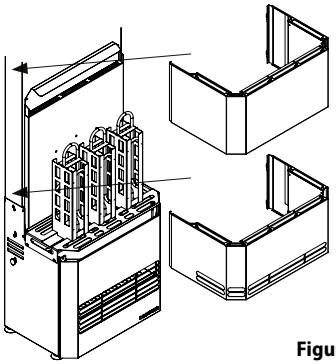

Figure 16

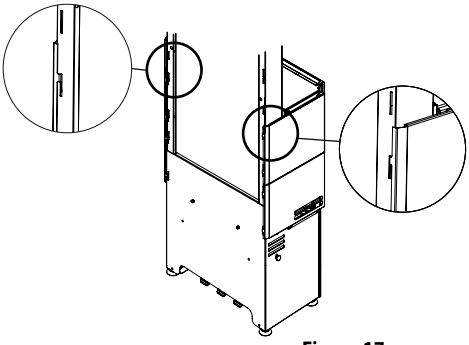

Figure 17

Amount of stones :

Air closed basket 50 kg/110 lb

Air open basket 55 kg/130 lb

When the basket is correctly filled, install the next basket section and fill it up to the top edge (**Fig. 18**).

See also **LOADING THE STONES** on page **34**.

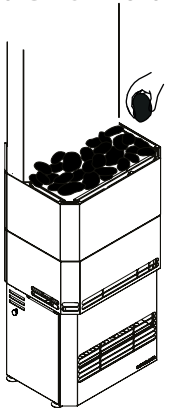

Figure 18

8. Place the protective top grille (**Fig. 19**).

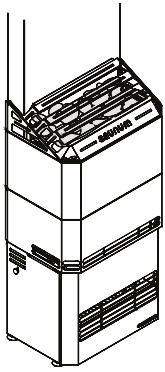

Figure 19

9. Install the Himalayan salt spheres.

9.1 Lift the output grille upward to the highest point.

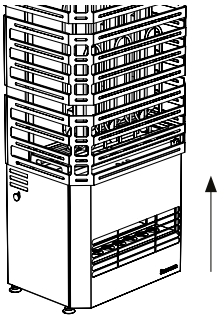

9.2 Pull from under the output grille edge outwards.

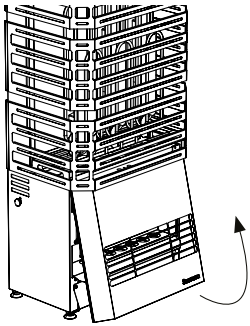

NOTE!

It is recommended to rinse the base of the salt tray at least once a year.

9.3 Remove the output grille by holding it slightly tilted and pulling it downwards.

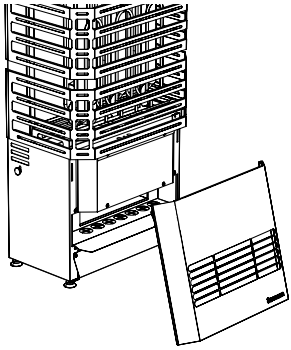

9.4 Take the salt spheres out from the textile bag. Place the salt spheres in the sockets so that each salt sphere is on one socket.

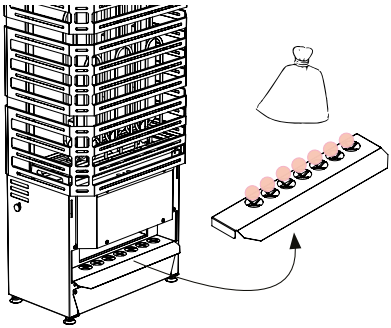

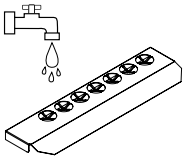

INSTALLING
THE CONTROL PANEL

For concealed installation, the data cable can be installed in a protective tube with a diameter of 1/2 in. inside the wall; if this is not possible, it must be installed on the wall surface.

The control panel must be installed on the wall **outside of Sauna Room**, in a place protected from water splashes. Must be installed inside a protective enclosure when used outdoors.

1. **Remove the wall mount from the device.**

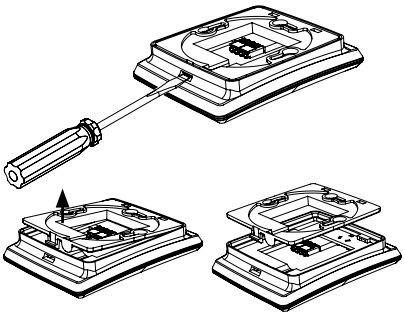

2. **Thread the data cable through the hole in the wall mount and fasten the wall mount to the wall with screws.**



4x 22AWG

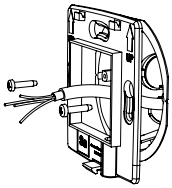

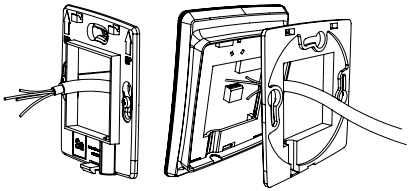

3. **Connect the data cable to the Air IQ panel connector.**

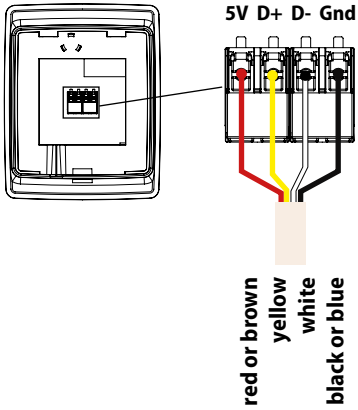

4. **Press the Air IQ control panel into the wall mount.**

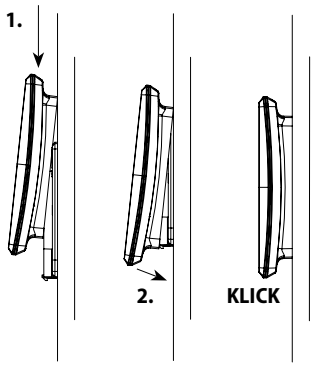

INSTALLING **THE TEMPERATURE SENSOR**

To install the temperature sensor/ overheating protection, proceed as follows.

- Connect the cable to the temperature sensor's plugs.
- Screw the temperature sensor onto the wall (see figure).
- The temperature sensor cannot be placed above the heater (see page 32 for details).

Minimum distance from ventilation, window and/or door is **20 in.**

The airflow near an air vent cools down the sensor, giving the control unit inaccurate temperature readings. As a result, the heater might overheat.

Feel free to contact technical support if assistance is needed.

Email: technicalsupport@bathingbrands.com
Phone: +1 (224) 253 5909

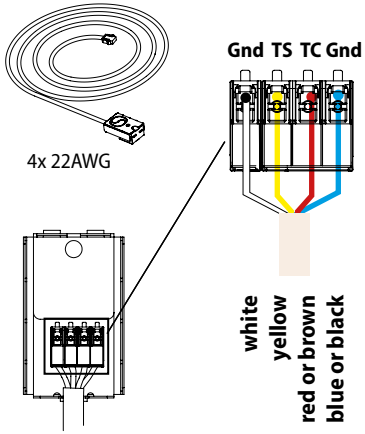

TEMPERATURE SENSOR

1. Prepare the installation point for the temperature sensor as illustrated in the diagram below, according to your specific sauna layout.

The temperature sensor may only be installed in the position marked "possible location" on the diagram.

Airflow near a ventilation opening may cool the sensor, which can result in the control unit receiving incorrect temperature readings. This may lead to overheating of the heater.

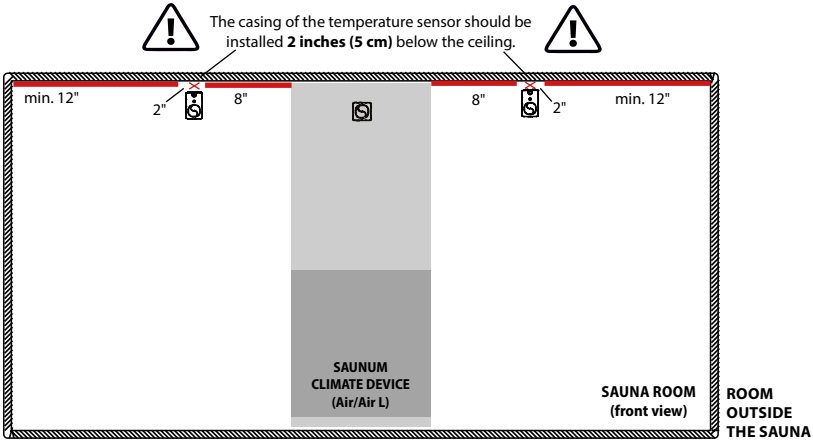

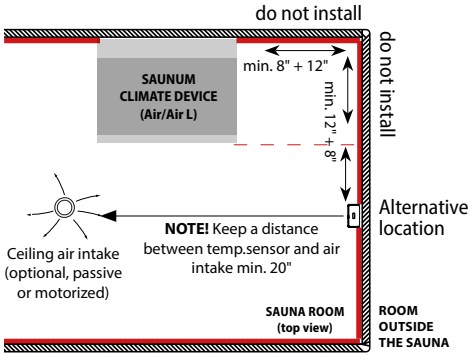

Barrel Sauna
Temperature Sensor Location

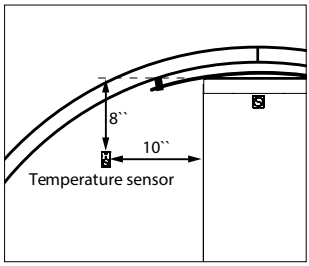

2. For a more aesthetic finish, the cable can be routed inside the wall.
3. Unroll the temperature sensor cable and secure temperature sensor casing with a screw as shown in the figure below.
4. Connect the cable coming out of the device to the cable of the temperature sensor with a molex connector.

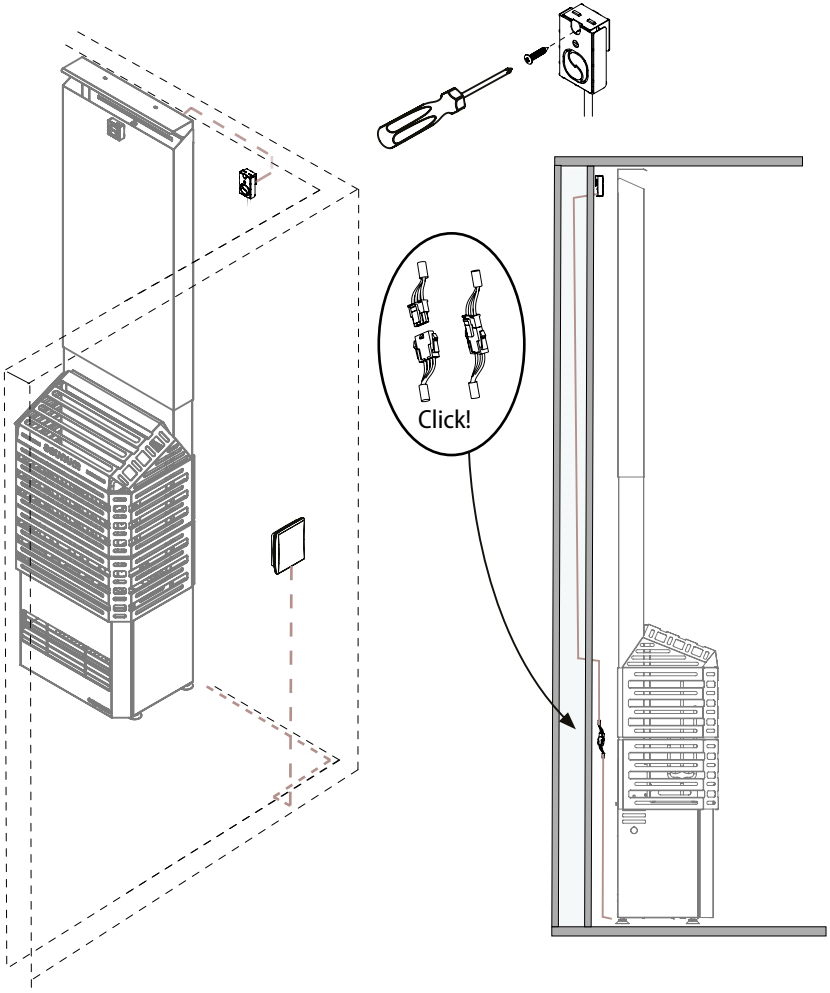

LOADING
THE STONES

Amount of stones :

Air closed basket 50 kg/110 lb

Air open basket 55 kg/130 lb

Before loading, open the stone box and sort the stones by size.

Start stacking from the bottom section of the basket, using larger stones first. This helps to create air channels that improve hot air circulation around the heating elements.

Important to know:

- Recommended stone size: rounded, 2–4 inches (5–10 cm) in diameter.
- Wash off any dust and dry the stones before installation.
- Do not use light, porous ceramic stones or soft tiles. These materials retain insufficient heat and may damage the heating elements.

When loading the stones, note the following:

- Do not allow the stones to fall into the heater.
- Do not force the stones between the heating elements.
- Stones must not rest directly on the heating elements; they should support each other to allow airflow.
- Do not load stones higher than the top basket. This will cause airflow issues and the heater will not function as intended.
- Do not place objects near the stone area or the fan that could alter airflow through the device.

⚠ WARNINGS

Staying in the sauna room for a long time raises your body temperature, which may be dangerous to your health!

- Do not touch the hot heater – the stones and the outside of the heater may burn you!
- Saunum strongly recommends using the Saunum Safety Rail around the heater to reduce the risk of accidental contact and potential burns.
- Be careful when moving in the sauna room, as the bench and the floor may be slippery!
- Do not hang towels and clothes to dry in the sauna room – this may cause a fire hazard!
- Make sure you have proper ventilation in the sauna room. Saunum is not responsible for possible salt corrosion of equipment and machinery.
- Excessive humidity may cause malfunction or failure of electrical components.
- Sea air and humid climates may cause an iron oxide layer (rust) on the metal surfaces of the heater!
- Clear obstructions closer than 20 inch in front of the fan opening!
- Sauna users must not keep their feet or other body parts closer than 20 inch in front of the working fan!
- Do not allow children, disabled or sick people into the sauna room without supervision!
- Consult a doctor about medical concerns related to steam, heat, and/or salt treatment!
- Make sure you are not allergic to salt treatment. Saunum is not responsible for potential side effects of salt treatment in the sauna room!
- Do not go to the sauna under the influence of alcohol, drugs, or narcotics!
- Do not sleep in the hot sauna room!

Hyperthermia

Hyperthermia occurs when the internal temperature of the body reaches a level several degrees above the normal body temperature of 98.6°F. The symptoms of hyperthermia include an increase in the internal temperature of the body, dizziness, lethargy, drowsiness, and fainting.

The effects of hyperthermia include:

- Failure to perceive heat;
- Failure to recognize the need to exit the room;
- Unawareness of impending hazard;
- Fetal damage in pregnant women;
- Physical inability to exit the room; and,
- Unconsciousness.

⚠ **WARNING – The use of alcohol, drugs, or medication is capable of greatly increasing the risk of fatal hyperthermia.**

HEATING
THE SAUNA ROOM

Before using the Saunum Air for the first time, make sure that:

- the electrical connections meet the requirements
- the supply voltage corresponds to the nominal ratings allowed for the Saunum Air
- the grounding (GND) is in working order
- the attachments of the sauna climate device housing are in order
- the Saunum Air is properly attached to the wall
- the over-current fuses are in working order
- the fan rotor rotates smoothly
- no tools or materials are left inside the housing after mounting the device.

When switching the Saunum Air on, check:

- airflow direction – air must be drawn in through the upper opening and discharged through the lower opening.
- that there is no vibration or excessive noise when the fan is running.

When the Saunum Air is switched on for the first time, the heating elements and the stones will emit an odor. The sauna room must be properly ventilated to remove the anticipated initial smell.

Presuming proper insulation of the room and that the power of the heater is suitable for the sauna size, it takes 45–90 minutes to reach the desired temperature.

The stones are usually heated to proper temperature for water usage at the same time as the sauna room. Turn the Saunum Air fan on just before entering the sauna room; this will help prevent the sauna bench from overheating and using excessive energy.

Saunum's recommended temperature for sauna operation is 140–194 °F.

USING THE SAUNA
CLIMATE DEVICE

Before switching on the Saunum heater, make sure that no objects or items have been left on or inside the heater.

The operating time of the Saunum Air climate device can be adjusted using the Air IQ control panel or, if available, through a connected smart control system.

- Do not connect the device directly to mains power. Connection must be made through the control unit according to the wiring diagram
- The Saunum Air must not be used if the components of its housing have been removed and/or the wiring diagram has been changed.

- Children should not be allowed to access or play with the Saunum Air.
- When switching the Saunum Air on or off, refer to the Air IQ user manual.

After using the sauna, make sure that the Saunum Air is switched off.

ADJUSTING **THE TEMPERATURE**

During Initial heat up the Saunum Air air-circulation fan must remain switched off.

This will allow the sauna room to heat up faster and the bench will not get too hot during the warming process. To find the right setting, start testing at the lowest temperature and lowest airflow rate. If the temperature becomes too high while in the sauna room, reduce the target temperature in the sauna room.

REGULATION OF THE **SAUNA**

Set the fan speed on the Air IQ control panel to the desired level according to the control unit Air IQ user manual. There is 3 levels available.

Fan speed must be preset or it can be changed once the target temperature is reached.

To reduce out put steam temperature you can open air cooling valve on the left side of the heater see page 9 E.

As a default the valve is set to 1/3 open (~30%). To cool the steam, open the valve gradually; to increase steam temperature, close it.

USE OF **HIMALAYAN SALT**

The Saunum Air comes with Himalayan salt spheres. The use of salt spheres in the device is optional and does not affect the main function of the device if not elected.

To use the salt spheres, they must be installed in the sockets between the air outlet grille and the fan. Make sure that the salt spheres are correctly placed in their individual slots and do not obstruct the fan rotation.

To install or remove the salt spheres, remove the air output grille (see page 29) and place the salt spheres in their sockets. After installing or removing the salt spheres, reposition the air output grille. The Saunum Air may only be used with the air output grille in place!

Do not use/start the device if the salt spheres become dislodged near the fan housing!

The use of third-party salt spheres is not covered by the device warranty.



LADLING WATER
ON THE HEATER

The air in the sauna becomes dry as it heats up. Therefore, it is necessary to create steam to achieve a suitable level of humidity. The effects of heat and steam on people are different. When testing the different settings of the Saunum Air, you will find the most suitable combination of temperature and humidity.

The volume of the sauna ladle should not exceed 6 - 7 fluid oz. When throwing water, the amount of water should not exceed 6 - 7 fluid oz, because by pouring too much water on the stones at once, some of it may be sprayed outwards in splashes of boiling water.

Make sure that people are at a safe distance from the heater when creating steam!

Hot steam and water splashes cause skin burns.

Only fragrances specially designed for sauna may be used in the water. Follow the instructions on the package.

WATER QUALITY REQUIREMENTS

The water used for ladling onto the heater must comply with domestic water quality standards.

To prevent corrosion, scaling, and damage to the heater components, ensure that the water does not exceed the maximum concentration of impurities listed below.

Water properties	Effect	Maximum impurity level
Organic impurities	Colour, taste, precipitates	12 mg/l
Iron concentration	Colour, odour, taste, precipitates	0.2 mg/l
Manganese (Mn) concentration	Colour, odour, taste, precipitates	0.10 mg/l
Hardness (main substances: magnesium (Mg) and calcium (Ca))	Precipitates	Mg: 100 mg/l, Ca: 100 mg/l
Chloride-containing water	Corrosion	Cl: 100 mg/l
Water electrical conductivity	Corrosion, faster electrochemical reactions	3000 µS/cm

⚠ Do not use chlorinated water, seawater, water containing arsenic or radon. Such water poses a health risk and causes rapid corrosion of metal components.

MAINTENANCE

Due to large temperature fluctuations, stones tend to break down. Stones must be restacked at least once a year and even more frequently when using the sauna often. When restacking the stones, remove stone fragments from the bottom of the heater and replace the broken stones with new ones. By monitoring this, the heating capacity of the heater remains optimal and the risk of overheating is avoided.

If you use Himalayan salt spheres with the Saunum Air, it is recommended to inspect the salt spheres once a year and, if necessary, replace worn and broken salt spheres with new ones. Make sure that there are no foreign objects in the fan air vents of the climate device.

⚠ CAUTION! Before maintaining and cleaning the Saunum Air, the device power supply must be disconnected from the power and/or utilities, and the moving parts of the unit must completely stop.

Before servicing and cleaning the Saunum Air, make sure that:

- the Saunum Air is disconnected from the power and/or utilities (in addition to the device's power switch, also by means of over-current breakers or fuses);
- the device fan has stopped completely;
- the prescribed occupational safety and personal protective equipment is used when performing the work;
- the connection cables are undamaged. In the event of damage to the connection cables, have the cables replaced by a qualified electrician in accordance with the applicable standards and requirements before continuing maintenance and cleaning work.

The device housing can be cleaned with a cloth dampened with water. Do not use pressure washers, running water, chemical cleaners, or solvents to clean the housing!

Use a 10% citric acid solution to remove scale and rinse with water.

Excessive dirt can prevent the fan from operating correctly, causing an increase in noise when operating. Noise may also increase due to damage/bending of the fan blades. Make sure that there are no foreign objects or salt in the working area of the fan rotor.

The fan will naturally stay free of debris with regular use. If cleaning is needed, we recommend contacting a sauna airflow specialist.

⚠ CAUTION! Using compressed air to clean the fan can permanently damage the fan rotor! The fan bearings are maintenance-free and must be replaced if problems occur.

It is recommended to check all electrical connections of the Saunum Air at least once a year. This can be done by a certified electrician.

Please note. The electric heater requires a control panel and stones.

Do not leave the fan of the climate device running when you are not in the sauna room – this will cause excessive energy consumption, and the sauna bench will become too hot!

Contact a sauna distributor service specialist to perform maintenance. In the case of any disturbances in the operation of the Saunum Air, stop use of the device immediately and have the device inspected by a person authorized by Saunum.

THE SAUNUM AIR IS NOT HEATING OR BLOWING AIR. ENSURE THE FOLLOWING:

- That the heater breakers and fuses are in working order.
- That all wiring is properly connected.
- That the Saunum Air is switched on.
- That the target temperature has been set and reached.

THE SAUNA ROOM HEATS UP TOO SLOWLY. THE WATER LADLED OVER THE STONES COOLS THEM DOWN QUICKLY.

- Make sure that the air circulation fan of the climate device is switched off during sauna room heating.
- Make sure that the breakers and fuses of the Saunum Air are in working order.
- Increase the selected temperature on the control panel.
- Make sure that the power output (kW) of the heater is sufficient.
- Check the stones. Stones that are placed too tightly, falling down/sinking closer over time, or the wrong type of stone may interfere with the air flow through the heater and therefore reduce the heating speed.
- Make sure that the ventilation of the sauna room is correct.

THE SAUNA ROOM HEATS UP QUICKLY, BUT THE TEMPERATURE OF THE STONES IS INSUFFICIENT. THE WATER THROWN ON THE STONES FLOWS DOWN.

- Make sure that the power output (kW) of the heater is not too high. If the power of the heater is suitable for the sauna room, it takes 45–90 minutes to reach the desired temperature in a properly insulated sauna room.
- Make sure that the ventilation of the sauna room is correct.

THE WALL COVERING OR OTHER MATERIAL NEAR THE HEATER BECOMES DIRTY QUICKLY.

- Observe the safety distance requirements.
- Make sure that no heating ele- ments are visible between the stones. If the heating elements are visible, turn off the device, let the stones cool, and lift them so that the heating ele- ments are completely covered.

Stones placed too sparsely may cause the heating elements to overheat and make the indoor climate of the sauna room uncomfortable and may cause a fire hazard!

THE WOODEN SURFACES OF THE SAUNA ROOM BECOME DIRTY OVER TIME.

This process may be accelerated by:

- direct or indirect sunlight
- warmth produced by the heater
- wall protective oil/wax product (protection equipment has poor heat resistance)
- fine particles from the stones.

THE HEATER SMELLS.

- See section HEATING THE SAUNA ROOM **page 36**.
- A hot heater may amplify odors mixed with air, but this, however, is not caused by the sauna nor the heater. Causes include paint, glue, oil, spices, etc.

THE SAUNUM AIR IS MAKING NOISE.

- There is always a certain noise when the fan is running. If it is not uniform and/or accompanied by a metallic sound, the fan is likely to need maintenance or repair. Check that there are no foreign objects in the fan air vents.
- Try switching the fan to a lower speed.
- Loud sounds are likely to be caused by stones cracking due to heat.
- Thermal expansion of the heater parts may cause noise when the heater warms up.

AIR IQ DISPLAYS THERMAL CUTOFF



The sauna room or the heater may be shut down due to critical overheating or due to exposure to low ambient temperatures (approximately 23 °F/-5 °C).

To reset the thermal limiter, either allow the sauna room to cool down or warm up the sauna room and the heater, depending on the cause.

See how to do it on **page 42**.

THERMAL CUTOFF



During a sauna session, the sauna room may become too hot and, for safety reasons, the thermal cutoff is activated.

The thermal cutoff may also be activated if the heater has been exposed to low ambient temperatures prior to use.

There may be two possible cut-off reasons:

- The temperature sensor has detected overheating — this occurs when the temperature reaches above 257 °F (125 °C) (the control panel will display 248 °F (120 °C) or higher temperature).
- The high-temperature limiter built into the stone basket has been activated. This may occur due to **overheating** or if the heater was previously exposed to **low ambient temperatures** (e.g. during transport, storage, or installation in an unheated sauna).

The cause of overheating must be resolved before resetting the overheat protector!

Actions:

- Let the room cool down for about 10 minutes to approximately 154 °F (68 °C), OR allow the heater to reach normal room temperature.

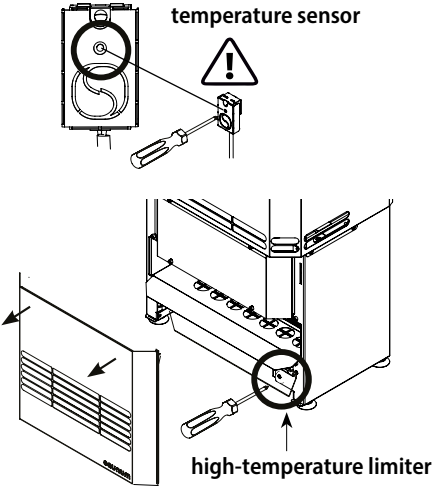

- If the control panel shows a temperature above 248 °F (120 °C), reset the temperature sensor.
- If the control panel shows a temperature below 248 °F (120 °C), reset the high-temperature limiter (to remove output grille see page 29).

After resetting either, the temperature sensor or the high-temperature limiter, restart the system using one of the following methods:

- Preferred method: Switch off the circuit breaker, wait 10 seconds, and then switch it back on.
- Alternative method: Reboot the system from the Air IQ control panel. Navigate to View 5 in the Air IQ control panel menu (see separate Air IQ control panel user manual), select “Reboot”, and confirm by pressing OK

INSTALLING AND REPLACING THE HEATING ELEMENTS

The heating elements are connected to the device via screw terminals. It is necessary to disconnect the screw terminals before removing the heating elements.

Use an appropriate tool (e.g. 5/32" Allen key) to remove the wires from the heating elements, depending on the type of screw used.

DIN 912, M4 x 6N 9

DIN 6798, M4

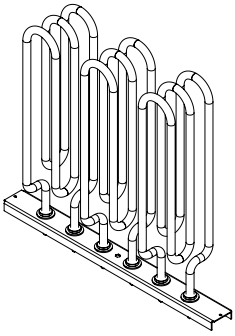

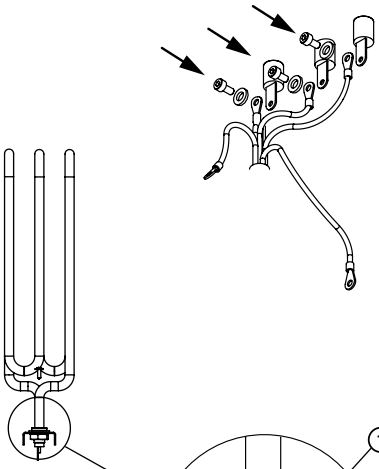

Each heating element is fixed with special gaskets (1), star-washers (2) and nuts (3).
Use 31/32 (SAE)or 24 mm (metric) socket wrench to remove the nut.

31/32(SAE)
24 mm

WARRANTY

With the Saunum device warranty, Saunum guarantees that the product will be free from defects in the materials and the assembly for a specified period after the date of purchase. If, during the warranty period, the device is found to be defective due to the use of substandard materials or the quality of the assembly, Saunum's recommended repair partners will repair or replace the device or its defective part under the conditions set out below. Saunum reserves the right to decide whether to replace the defective product component or to replace the device with a new one. The replaced defective product components remain the property of Saunum.

Warranty conditions:

1. The warranty is only valid if a completed installation report is submitted with the claim.
2. The device has been connected to the power network by a qualified electrician in accordance with the regulations in force.
3. The warranty period of the sauna climate device when used in a private sauna is two (2) years.

Not covered by the warranty:

1. Saunum will not cover labor cost.
2. Routine maintenance and cleaning of the device and replacement of the components due to normal wear and tear.
3. Adaptation or modification of the device for any purpose other than that indicated in the instructions for use.
4. Risks arising from transport.
5. Damage resulting from the misuse of the device.
6. Damage resulting from the improper installation of the device;
7. Repairs to the device not carried out by Saunum's recommended repair partner (maintenance partner).
8. Accidents, lightning, water, fire, improper ventilation, or any other factor beyond the control of Saunum.
9. Breakages caused by the use of stones and salt spheres not recommended by Saunum.
10. The heating elements and the salt spheres.

Read all of the instructions for use carefully and thoroughly before using the device and keep them in a safe and easily accessible place.

INSTALLATION **REPORT**

Date of purchase: _____

Heater type: _____

Sticker/serial number: _____ Date of installation: _____

Place of installation: _____

Installed by: _____

Checked by: _____

Date, signature: _____

Description of the work done: _____

All the details are available for the installation _____

There are no color defects or dents _____

Installed on the wall or on the floor according to the instructions _____

The electrical connections are made according to the installation instructions _____

All the heating elements heat up _____

The three fan speeds are working / in the correct order _____

Notes: _____

Customer's contact (name, email address): _____

Received work: _____

Warranty start date: _____

For Saunum Saunas LTD. installation and maintenance help contact with your local distributor: **techsupport@bathingbrands.com phone: +1 (224) 253-5909**

Please note! The sauna may only be connected to the power network by a certified electrician following NEC and local building codes.

ENG

INSTRUCTION FOR USE AND INSTALLATION

Sauna Heater
E525245

Manufacturer: Saunum Saunas North America LTD
Suur-Paala 19,
11415 Tallinn, Estonia

declares that the product:

Saunum Air

complies with the requirements of the following standards:

UL 875, Electric Dry-Bath Heaters, Edition 9, Revision Date 01/04/2021;
CSA C22.2 No. 164, Electric Sauna Heating Equipment, Edition 2,
Issue Date 02/2018.

These products do not contain hazardous substances in excess of 0.1% (SVHC) and meet the requirements of the REACH Regulation (1907/2006/EU REACH XVII) and comply with the requirements of the RoHS Directive (2011/65/EU, RoHS2 and 2015/863/EU, RoHS3)